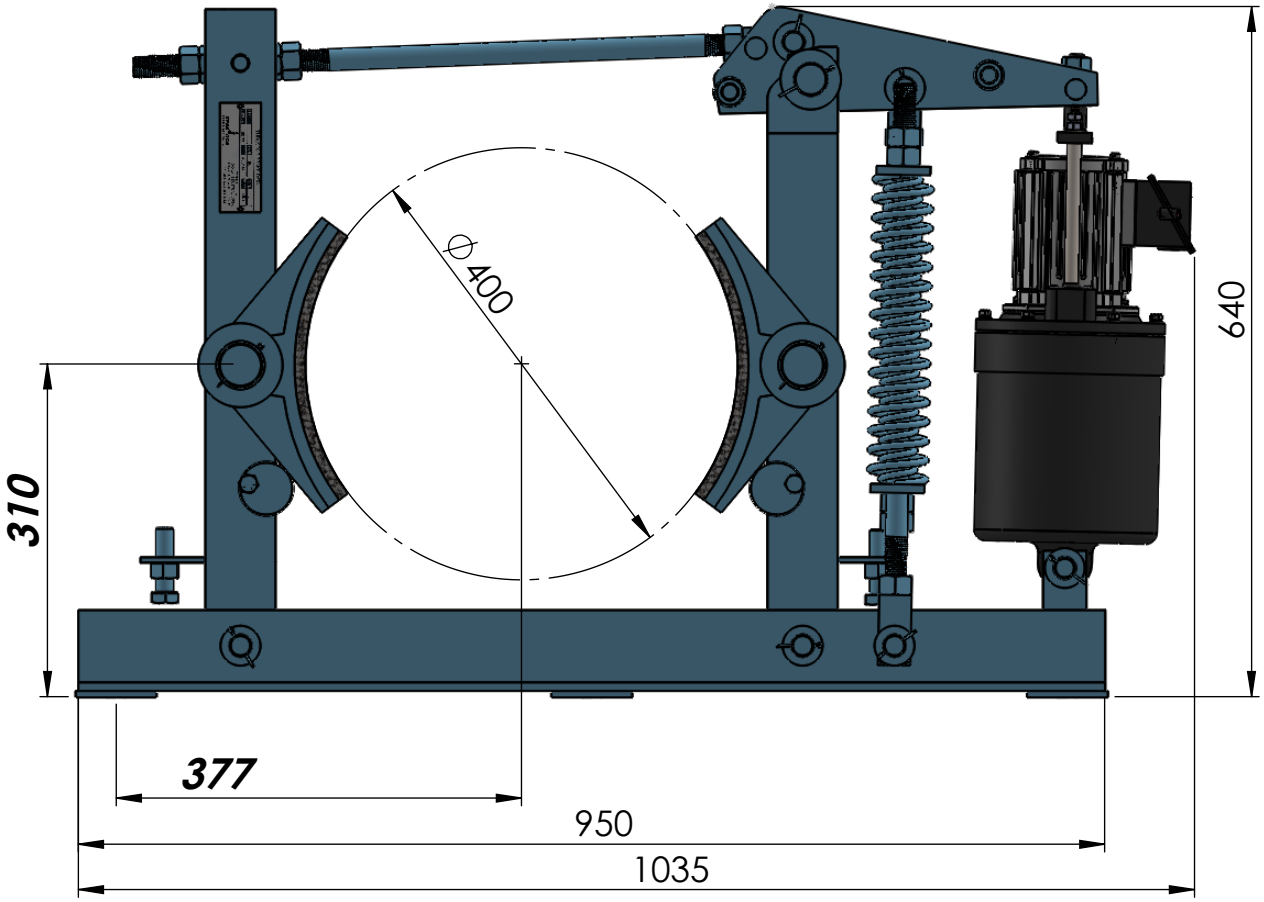

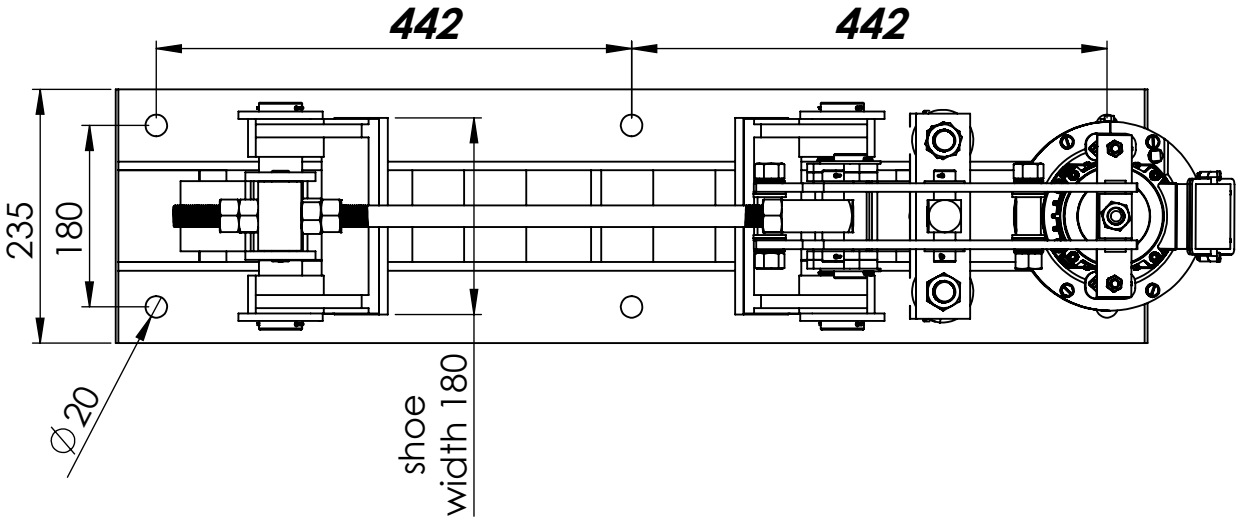

UNLESS OTHERWISE SPECIFIED: DIMENSIONS ARE IN MILLIMETERS SURFACE FINISH: TOLERANCES: LINEAR: ANGULAR:	FINISH:	DEBURR AND BREAK SHARP EDGES	DO NOT SCALE DRAWING / REVISION

Speedage Engineers (India) Pvt. Ltd.

	NAME	SIGNATURE	DATE	CONTACT
DRAWN	Himanshu Tiwari			
CHK'D				
APPV'D	J.A. Raichandani			9810173991
MFG				
Q.A				

TITLE: Thruster Brake MDT 400-46
Braking Torque: 110Kg.m
Thruster Stroke: 51mm
Thruster Capasity: 46Kg

MATERIAL:

WEIGHT:

DWG NO. SAE/DWG/THB/B400_46/01

A4

SCALE:1:7

SHEET 1 OF 1

THIS DRAWING IS THE PROPERTY OF **SPEEDAGE ENGINEERS (INDIA) PVT. LTD.** &MUST NEITHER BE COPIED NOR BE MADE KNOWN TO ANY OTHER PARTY WITHOUT THEIR PRIOR WRITTEN CONSENT.